# Analytical Passivity Analysis for Wave-based Teleoperation with Improved Trajectory Tracking

Bita Fallahi[1], Hamid D. Taghirad[2]

[1] *Department of Systems and Control, K. N. Toosi University of Technology*

[2] *Department of Systems and Control, K. N. Toosi University of Technology, taghirad@kntu.ac.ir*

**Abstract**

In wave based teleoperation, although passivity is ensured for any time delay, tracking performance is usually distorted due to the bias term introduced by wave transmission. To improve the position tracking error, one way is to augment the forward wave with a corrective term and achieve passivity by tuning the band width of a low pass filter in the forward path. However, this filter fails to meet the passivity condition in contact to stiff environments, especially at steady state. In this paper a new method is proposed and an analytical solution for passivity at steady state and a semi analytical solution for all other frequencies are represented. This method significantly reduces the complexity of the closed-loop system, ensures passivity in contact to the stiff environments, and improves trajectory tracking. Simulation results are presented to show the effectiveness of the proposed method.

**Keywords:** Teleoperation, Wave variable, Time delay, Passivity, Stiff environment, Force disturbance, tracking performance.

## 1 INTRODUCTION

Teleoperation systems allow human operators to manipulate the environment from a remote and safe position, through two robotic arms. These systems have been utilized in many remote and hazardous operations such as space construction, nuclear plants, under water platforms, mining, etc. Basic teleoperation systems consist of two robots, namely master and slave, cooperating together through a communication channel for transmitting data. Bilateral teleoperation provides a method for bidirectional transmission of data between master and slave. The main concern in designing control schemes for teleoperation systems is the stability of its control loop which could be simply violated due to the presence of time delays in transmission channel. On the other hand, another major requirement that measures the performance of the whole system is transparency. Basically, transparency determines how well a sense of a remote object could be transmitted to the human operator, while manipulating the master robot. Depending on the required application, different methods are proposed in the literature [1] to achieve desired performance and stability of the system. In general, the traditional power variables, velocity and force or their combination are exchanged between master and slave. Using force sensors on the slave robot provides human

operator with the environmental forces and will improve the transmitted sense. An alternative way is to use disturbance observers[2] instead of force sensors for disturbance suppression and reaction force estimation.

On the other hand, since slave robot is remotely operated, the transmitted data may encounter time delays for remote teleoperations. This time delay can significantly degrade the performance and may cause instability, especially in presence of force feedback. The effects of time delays and delayed force feedback were first reported by Ferrell [3]. Later Anderson [4] proposed a method, based on passivity and scattering theory, to stabilize the force reflecting teleoperation system. Thereafter, several techniques have been employed to deal with time delay problem including wave variable [5], virtual time delay method [6], adaptive control [7], etc.

Among passivity based methods, wave variable approach has a more intuitive and physically motivated formalism, which gives a clear view of power flows. In wave domain, instead of traditional velocity and force variables, wave variables are transmitted and the communication channel become passive independent to the size of delay. This characteristic guarantees the passivity of the system, however, the tracking performance is distorted due to the wave reflections and bias term introduced by the wave communication. To improve performance there are methods proposed to reduce the effects of time delay [8], [9] and wave reflections [10], [11]. By adding wave impedance a modified wave variable method is proposed to improve position and force tracking errors [12].Ye and Liu [13],and Hu and Liu [14] proposed methods to remove bias term by adding corrective terms at master or slave sides, in these methods passivity is guaranteed by tuning the bandwidth of the low pass filter in the forward path.

However, stiff environments have been overlooked in many of those contributions. In this paper it is shown that in presence of stiff environments, the energy injected to improve trajectory tracking will be dissipated by the low pass filter only under special conditions. Simulations show that a critical point which interferes with passivity condition is zero. This critical point is analytically perused, and a necessary condition is presented to ensure system passivity. Furthermore, a method is proposed that compensates the effect of stiff environment at steady state for zero frequency. In this method a gain is added on the left moving wave which reduces the system's gain at all frequencies and ensures system passivity; moreover, steady state force tracking and perfect trajectory tracking will be attained. Finally, an analytical method is presented to find the suitable value for such gain that guarantees passivity.

This paper is organized as follow. In Section 2 wave variables and improved trajectory tracking method are introduced. In Section 3 the proposed method and the analytical solution are presented. Simulation results are shown in Section 4, and concluding remarks are given in the last section.

## 2 BACKGROUND

### 2.1 Wave Variables

In wave-based teleoperation instead of the power signals $(f, \dot{x})$, the corresponding wave variables $(u, v)$ are transmitted across the communication channels. These variables are defined as:

$$u_i = \frac{1}{\sqrt{2b}}(b\dot{x}_i + f_i) \ , \ i = m, s \tag{1}$$

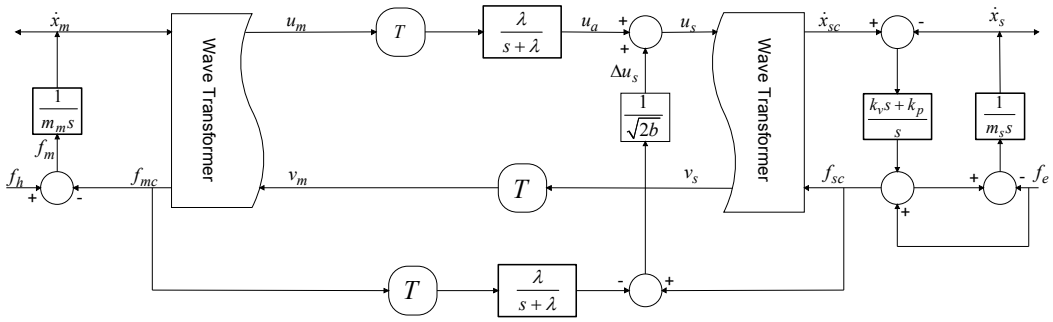


Figure 1: Improved tracking structure

$$v_i = \frac{1}{\sqrt{2b}}(b\dot{x}_i - f_i) \quad , \; i = m, s \tag{2}$$

Where $\dot{x}$ and $f$ are the velocities and control forces for $i = m$ master and $i = s$ slave, and $b$ is the characteristic wave impedance which is a positive constant. The wave variables at both side are related to each other via the delay in the communication channel, where $T$ denotes the time delay in forward and backward transmission lines.

$$u_s = u_m(t - T) \quad , \quad v_m = v_s(t - T) \tag{3}$$

Based on these wave variables the reference signals, velocity for slave and control force for master are derived as

$$\dot{x}_{sc} = \frac{1}{\sqrt{2b}}(u_s + v_s) \; = \dot{x}_m(t - T) - \frac{1}{b}\left[f_{sc}(t) - f_{mc}(t - T)\right] \tag{4}$$

$$f_{mc} = \sqrt{\frac{b}{2}}(u_m - v_m) = f_{sc}(t - T) + b\left[\dot{x}_m(t) - \dot{x}_{sc}(t - T)\right] \tag{5}$$

In wave domain the passivity condition becomes

$$\int_0^t \frac{1}{2}(u_m^T u_m - u_s^T u_s) + \int_0^t \frac{1}{2}(v_s^T v_s - v_m^T v_m) \geq -E_{store} \tag{6}$$

Using 3, the passivity condition turns into

$$E_{store}(t) = \int_{t-T}^{t} u_m^T u_m + v_s^T v_s \tag{7}$$

Equation 7 shows that the energy is temporarily stored for the duration of time delay, consequently the system becomes robustly passive for any amount of time delay.

### 2.2 Improving trajectory tracking

In many applications it is desired to have zero trajectory tracking error at slave side. In wave domain according to equation 4, the desired slave velocity is not equal to the delayed master velocity due to the bias term brought in by the wave transformation, thus perfect master-slave trajectory tracking will not be attained. To improve trajectory tracking it is suggested in [13], to eliminate this distortion by adding a corrective term to the received wave at slave's side. Adding this term will inject energy to the system and may affect passivity of the system. As shown in figure 1 inserting a low pass filter in the forward path will act as a dissipative element and also may reduce wave reflections.

$$\begin{aligned} u_s(t) &= L^{-1}\left(\frac{\lambda}{s+\lambda}\right) * u_m(t-T) + \Delta u_s(t) \\ \Delta u_s(t) &= \frac{1}{\sqrt{2b}}\left[f_{sc}(t) - L^{-1}\left(\frac{\lambda}{s+\lambda}\right) * f_{mc}(t-T)\right] \end{aligned} \tag{8}$$

in which, $L^{-1}$ denotes inverse Laplace transform and $*$ denotes convolution. Since the slave robot and the environment are passive subsystems, it can be concluded that the power flow at the port of $(u_s, v_s)$ satisfies passivity condition, meaning that the energy of the outgoing wave is limited to the energy provided by the incoming wave, in other words, the magnitude of $|V_s(s)/U_s(s)|_{s=j\omega}$ is not more than 1. For the system shown in figure 1 this can be derived as

$$\eta_s = \frac{V_s(s)}{U_s(s)} = \left(\frac{b\left(G_{pd} + m_s s\right) - G_{pd}\left(m_s s + G_{env}\right)}{b\left(G_{pd} + m_s s\right) + G_{pd}\left(m_s s + G_{env}\right)}\right)_{s=j\omega} \tag{9}$$

in which, $G_{pd} = (k_v s + k_p)/s$ is slave PD controller and $G_{env} = (B_e s + K_e)/s$ is the environment model considered as a simple spring-damper.
At the port of $(u_m, v_m)$ the power flow ratio is

$$\eta_m = \frac{V_m(s)}{U_m(s)} = \left(\frac{\lambda}{s+\lambda}\frac{e^{-2Ts}}{\left(1/\eta_s\right) - \lambda/\left(s+\lambda\right)e^{-2Ts} + 1}\right)_{s=j\omega} \tag{10}$$

In [13], it is shown that it is possible to find $\lambda$ low enough such that

$$|\eta_m| < 1 \tag{11}$$

This condition indicates that the outgoing energy is less than the incoming energy and assures passivity of the system.

## 3 Proposed Method

Computing $|\eta_m|$ numerically with fixed $\lambda$ and frequency $\omega$, shows that 11 satisfies only for limited values of $K_e$ and one main violation of the condition occurs at steady state frequency. Hence, it is necessary to study the passivity condition at steady state. In order to do this, consider Taylor series of $|\eta_m|$ in neighborhood of $\omega = 0$:

$$1 + \frac{4b\left(K_e - B_e\lambda + 2K_e\lambda T\right)\omega^2}{K_e\lambda} + O\left[\omega\right]^4 \tag{12}$$

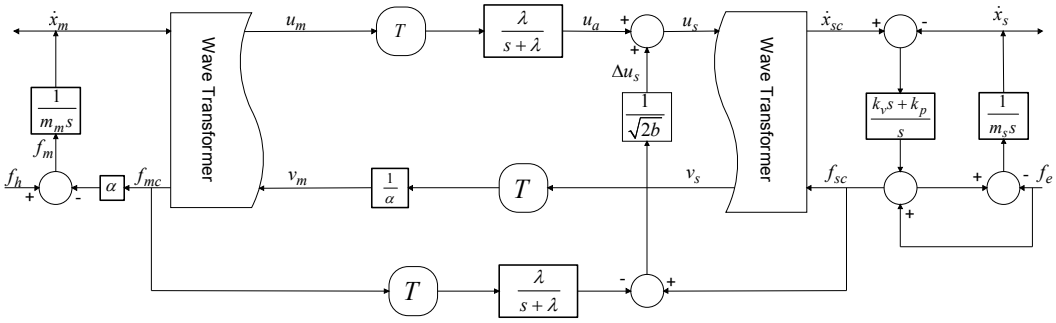


Figure 2: Proposed Structure

Neglecting higher order terms and in order to satisfy passivity conditions 11, it is necessary to have

$$\frac{4b\left(K_e - B_e\lambda + 2K_e\lambda T\right)\omega^2}{K_e\lambda} < 0 \tag{13}$$

which may be simplified to

$$\lambda > \frac{K_e}{B_e - 2K_eT}\,, \quad K_e < \frac{B_e}{2T} \tag{14}$$

This inequality gives the necessary condition on the environments constants such that an acceptable value for $\lambda$ can be achieved. This can be physically interpreted that, this method is applicable only under constrained condition 14, which is not suitable for stiff environments.

Since the low pass filter in the forward path has unity gain at steady state frequencies, it does not affect passivity condition at those frequencies. Therefore, it is necessary to reduce the steady state gain of $\eta_m$. In order to accomplish this, as illustrated in figure 2, a simple gain $(\alpha > 1)$ is inserted in the left moving wave path. Since in this configuration the right moving path has not changed, the reference signal and the power flow ratio at slave port will remain as before, however, theses values at master port will change into

$$f_{mc} = \frac{1}{\alpha}f_{sc}(t-T) + b\left[\dot{x}_m(t) - \frac{1}{\alpha}\dot{x}_{sc}(t-T)\right] \tag{15}$$

$$\eta_m = \frac{V_m(s)}{U_m(s)} = \left(\frac{1}{\alpha}\frac{\lambda}{s+\lambda}\frac{e^{-2Ts}}{(1/\eta_s) - \frac{1}{\alpha}\lambda/\left(s+\lambda\right)e^{-2Ts} + 1}\right)_{s=j\omega} \tag{16}$$

As illustrated in figure 2 multiplying the received force at master side by $\alpha$, compensates the steady state force tracking errors, hence, in the steady state the force sensed by human operator, equals the environment force. Nevertheless, if the system forces are much higher than the velocities, the force tracking errors will be quite low.

Considering Taylor series of 16 in neighborhood of $\omega = 0$

$$1 + \frac{4\alpha b\left(K_e - \left(\left(-1+\alpha\right)b + B_e\right)\lambda + 2K_e\lambda T\right)\omega^2}{K_e^2\lambda} + O\left[\omega\right]^4 \tag{17}$$

and neglecting the higher order terms, the necessary condition on environment parameters turns into

$$\lambda > \frac{K_e}{(\alpha-1)\,b + B_e - 2K_eT}\,, \quad K_e < \frac{(\alpha-1)\,b + B_e}{2T} \tag{18}$$

Above inequality shows that the upper bound of $K_e$ depends on the value of $\alpha$. By increasing $\alpha$, the restriction on $K_e$ will be more relaxed. Not only at the steady state frequency but also at all frequencies the system gain are affected by this gain. Therefore, the effect of $\alpha$ may dominate the effect of low pass filter, and it is possible to find $\alpha$ large enough to satisfy the passivity condition. To do this consider 11 as

$$\left|\frac{1}{\eta_m}\right| > 1 \tag{19}$$

Simplifying this will lead to

$$\left|\alpha\frac{s+\lambda}{\lambda}\left(A\left(\omega\right)+1+jB\left(\omega\right)\right)-e^{-2T\omega j}\right| > 1 \tag{20}$$

in which,

$$\frac{1}{\eta_s(j\omega)} = A\left(\omega\right)+jB\left(\omega\right) \tag{21}$$

Using simple triangular norm relations, 20 becomes

$$|\tilde{\eta}|\left(|\tilde{\eta}| - 2\cos\left(\tilde{\phi}+2T\omega\right)\right) > 0 \tag{22}$$

where,

$$|\tilde{\eta}| = \frac{\alpha\sqrt{\lambda^2+\omega^2}}{\lambda}\left(\sqrt{\left(1+A\left(\omega\right)\right)^2+B\left(\omega\right)^2}\right)\ ,\ \tilde{\phi} = \tan^{-1}\left(\frac{\omega}{\lambda}\right) \tag{23}$$

Equation 22 is equivalent to

$$|\tilde{\eta}| > 2\cos\left(\tilde{\phi}+2T\omega\right) \tag{24}$$

Using trigonometric relations in 24 and simplifying it, the sufficient condition for passivity of the system is derived as:

$$\alpha > \max\left|\tilde{G}\right| \tag{25}$$

where

$$\tilde{G} = 2\frac{\left(\left(1+A\left(\omega\right)\right)-\left(\frac{\omega}{\lambda}\right)B\left(\omega\right)\right)\cos\left(2T\omega\right)-\left(\left(1+A\left(\omega\right)\right)\left(\frac{\omega}{\lambda}\right)-B\left(\omega\right)\right)\sin\left(2T\omega\right)}{\frac{\lambda^2+\omega^2}{\lambda^2}\left(\left(1+A\left(\omega\right)\right)^2+B\left(\omega\right)^2\right)} \tag{26}$$

This framework is considered for stiff environments, in which steady state characteristics are challenging for passivity condition. However, since all frequencies will experience the value of $\alpha$ obtained from 25, it is possible to use this gain for all frequencies and eliminate the low pass filter in the right moving wave path. In this case 25 simplifies to

$$\tilde{G} = 2\frac{\left(1+A\left(\omega\right)\right)\cos\left(2T\omega\right)-B\left(\omega\right)\sin\left(2T\omega\right)}{\left(1+A\left(\omega\right)\right)^2+B\left(\omega\right)^2} \tag{27}$$

Equation 25 presents a semi analytical method to find the minimum value for $\alpha$. Eliminating the low pass filter in forward path has made the structure and the necessary condition much simpler. On the other hand, this structure has the advantage that the reference signal at slave side equals to the master's velocity without any filtering meaning that the master slave velocity tracking error tends to zero, and hence, immediately improves position tracking performance.

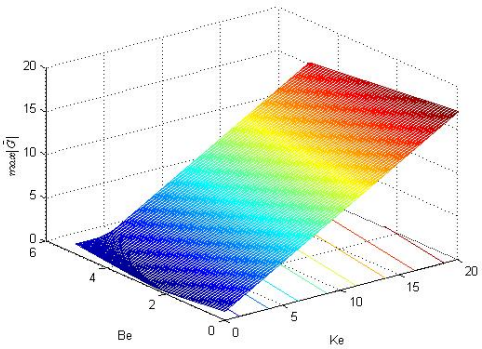


Figure 3: $\max|\tilde{G}|$ with respect to $K_e$ and $B_e$

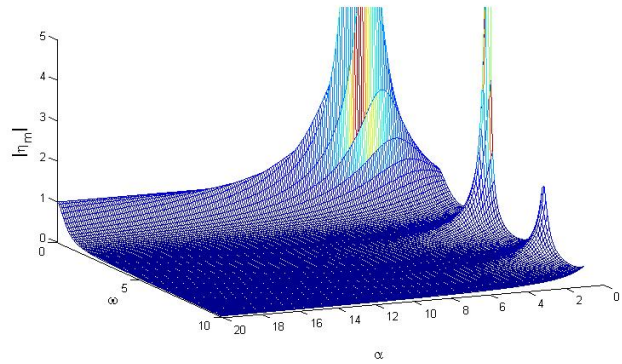


Figure 4: $|\eta_m|$ with respect to $\alpha$ and $\omega$

## 4 SIMULATIONS

In this section we simulate a teleoperation system with constant time delays in the communication channel. The proposed method is used to find the minimum acceptable value for $\alpha$, and as explained before, the low pass filter in the forward path is eliminated. The human is modeled as a PD-type position tracking system (i.e., spring and damper) with constant gains of $75N/m$ and $50Ns/m$. The model of the environment is given in previous section whose gains are considered as $0 \leq B_e \leq 5Ns/m$ and $0 \leq K_e \leq 20N/m$. The effective endpoint mass for master and slave robots are $m_m = 0.1kg, m_s = 0.1kg$, and the slave PD controller constants are designed to be $k_v = 5, k_p = 20$. The characteristic impedance is $b = 2.5$, and time delay is considered as $T = 1sec$. For this variable environment coefficients, $\alpha$ should be found large enough to satisfy the worst case.

Using the above parameters, figure 3 shows the maximum value of $\tilde{G}$ with respect to $K_e$ and $B_e$. It is necessary to choose the maximum value in this figure as lower bound of $\alpha$. As expected, an increment in $K_e$, leads to larger values for $\alpha$. According to this figure the minimum value of $\alpha$ is calculated as 15. Figure 4, illustrates the 3-D plot of $|\eta_m|$ with respect to frequency and different values of $\alpha$. It can be seen that at $\omega = 0$, $|\eta_m|$ equals 1, but for frequencies in neighborhood of $\omega = 0$ and low values of $\alpha$, $|\eta_m|$ exceeds 1. However these frequencies are not the only critical points and the maximum value of $|\eta_m|$ may occur at higher frequencies, as can be seen for small amounts of $\alpha$, there are some higher frequencies in which $|\eta_m|$ is more than 1 but for $\alpha > 15$ the maximum value of $|\eta_m|$ lies below 1.

The position of master and slave are shown in figure 5. In this configuration, since the low pass filter is omitted in the right moving path, the slave desired velocity equals the delayed master velocity which leads to perfect velocity and position tracking, meaning that the slave position tracks

delayed master position. This figure shows that the main objective in a teleoperation system is achieved in this configuration. The environment forces at both sides are shown in figure 6. According to equation 5 the desired force at master's side is perturbed from slave force by velocity terms caused by wave transformation, so exact force tracking at master's side is impossible. On the other hand the operator adjusts his force based on the transmitted signal, which is slave delayed force, due to this time delay in communication channel, changes in motion direction may cause spikes in human force but at steady state (when all velocities tend to zero), force tracking is achieved and the human force equals the environment force.

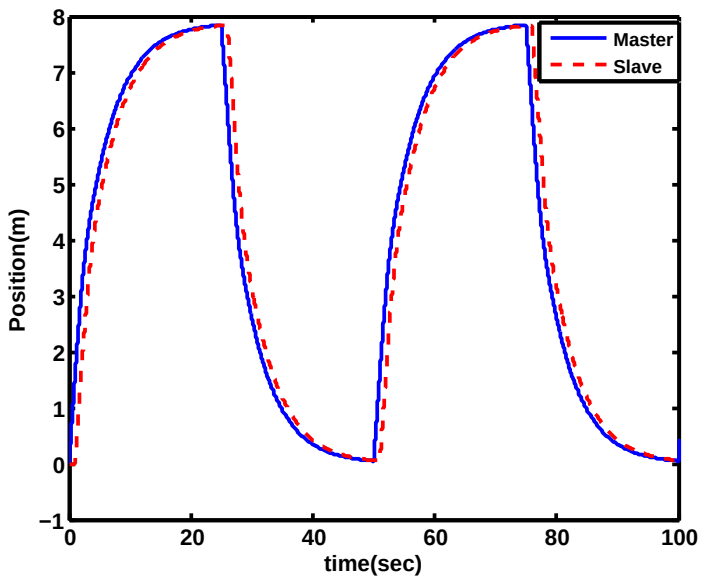


Figure 5: position of master and slave

## 5 Conclusions

In this paper a trajectory improved wave based teleoperation system is considered and its passivity condition is analyzed. It is shown that steady state frequency is a critical point for passivity, specially in contact to stiff environments. To ensure passivity a new and simple method is proposed, in which a pure gain as a dissipative element is added to the left-moving path. This structure can preserve the stability of the teleoperation system for constant but large time delays, and furthermore, can improve the tracking performance. A semi-analytical solution is presented to determine the design parameter, and finally, the effectiveness of the method is verified through simulations.

## REFERENCES

[1] P. Hokayem and M. Spong, "Bilateral teleoperation: An historical survey," *Automatica*, vol. 42, no. 12, pp. 2035–2057, 2006.

[2] B. Yalcin and K. Ohnishi, "Inverse scaled four channel control system with wave variables under time delay," in *IEEE International Conference on Industrial Technology, 2009. ICIT*

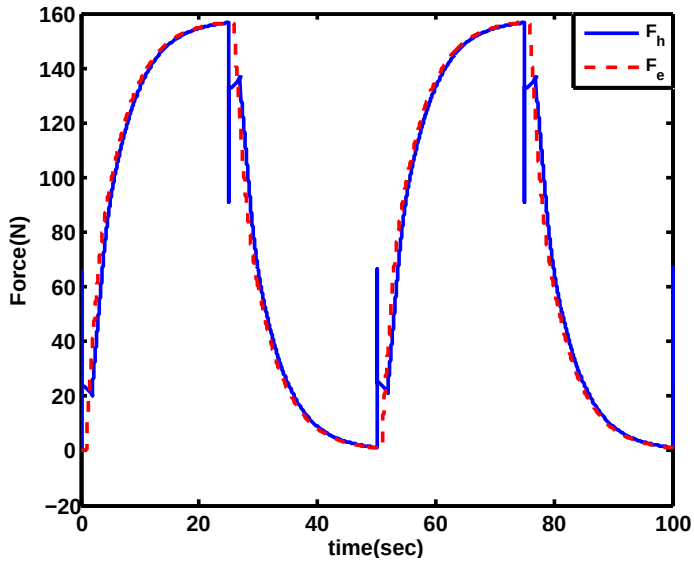


Figure 6: environment forces

*2009.*, pp. 1–6, IEEE, 2009.

[3] W. Ferrell, "Delayed force feedback," *Human Factors: The Journal of the Human Factors and Ergonomics Society*, vol. 8, no. 5, pp. 449–455, 1966.

[4] R. Spong and R. Anderson, "Bilateral control of teleoperators with time delay," *IEEE Trans. Automat. Control*, vol. 34, pp. 494–501, 1989.

[5] G. Niemeyer and J. Slotine, "Telemanipulation with time delays," *The International Journal of Robotics Research*, vol. 23, no. 9, p. 873, 2004.

[6] K. Kosuge, H. Murayama, and K. Takeo, "Bilateral feedback control of telemanipulators via computer network," in *Proceedings of the 1996 IEEE/RSJ International Conference on Intelligent Robots and Systems, IROS 96*, vol. 3, pp. 1380–1385, 2002.

[7] A. Shahdi and S. Sirouspour, "Adaptive/robust control for time-delay teleoperation," *IEEE Transactions on Robotics,*, vol. 25, no. 1, pp. 196–205, 2009.

[8] S. Munir and W. Book, "Internet based teleoperation using wave variables with prediction," in *2001 IEEE/ASME International Conference on Advanced Intelligent Mechatronics, 2001. Proceedings.*, vol. 1, pp. 43–50, IEEE, 2002.

[9] S. Ganjefar, H. Momeni, and F. Janabi-Sharifi, "Teleoperation systems design using augmented wave-variables and Smith predictor method for reducing time-delay effects," in *Proceedings of the IEEE International Symposium on Intelligent Control*, vol. 338, Piscataway, NJ, USA: IEEE, 2002.

[10] H. Ching, J. Mao, C. Kong, and R. Du, "Improving wave variables algorithm transient response based on input shaping," in *2008 Conference on Human System Interactions*, pp. 152–157, IEEE, 2008.

[11] J. Huang, C. Wu, Y. Chang, H. Lin, C. Wu, and S. Lee, "Design and implemention of wave variable based teleoperation systems," in *2010 International Conference on System Science and Engineering (ICSSE)*, pp. 304–309, IEEE, 2010.

[12] K. Kawashima, K. Tadano, C. Wang, G. Sankaranarayanan, and B. Hannaford, "Bilateral teleoperation with time delay using modified wave variable based controller," in *IEEE International Conference on Robotics and Automation, 2009. ICRA'09*, pp. 4326–4331, 2009.

[13] Y. Ye and P. Liu, "Improving Trajectory Tracking in Wave-Variable-Based Teleoperation," *IEEE/ASME Transactions on Mechatronics,*, vol. 15, no. 2, pp. 321–326, 2010.

[14] L. Hu, X. Liu, and G. Liu, "The wave-variable teleoperator with improved trajectory tracking," in *2010 8th IEEE International Conference on Control and Automation (ICCA),*, pp. 322–327, 2010.